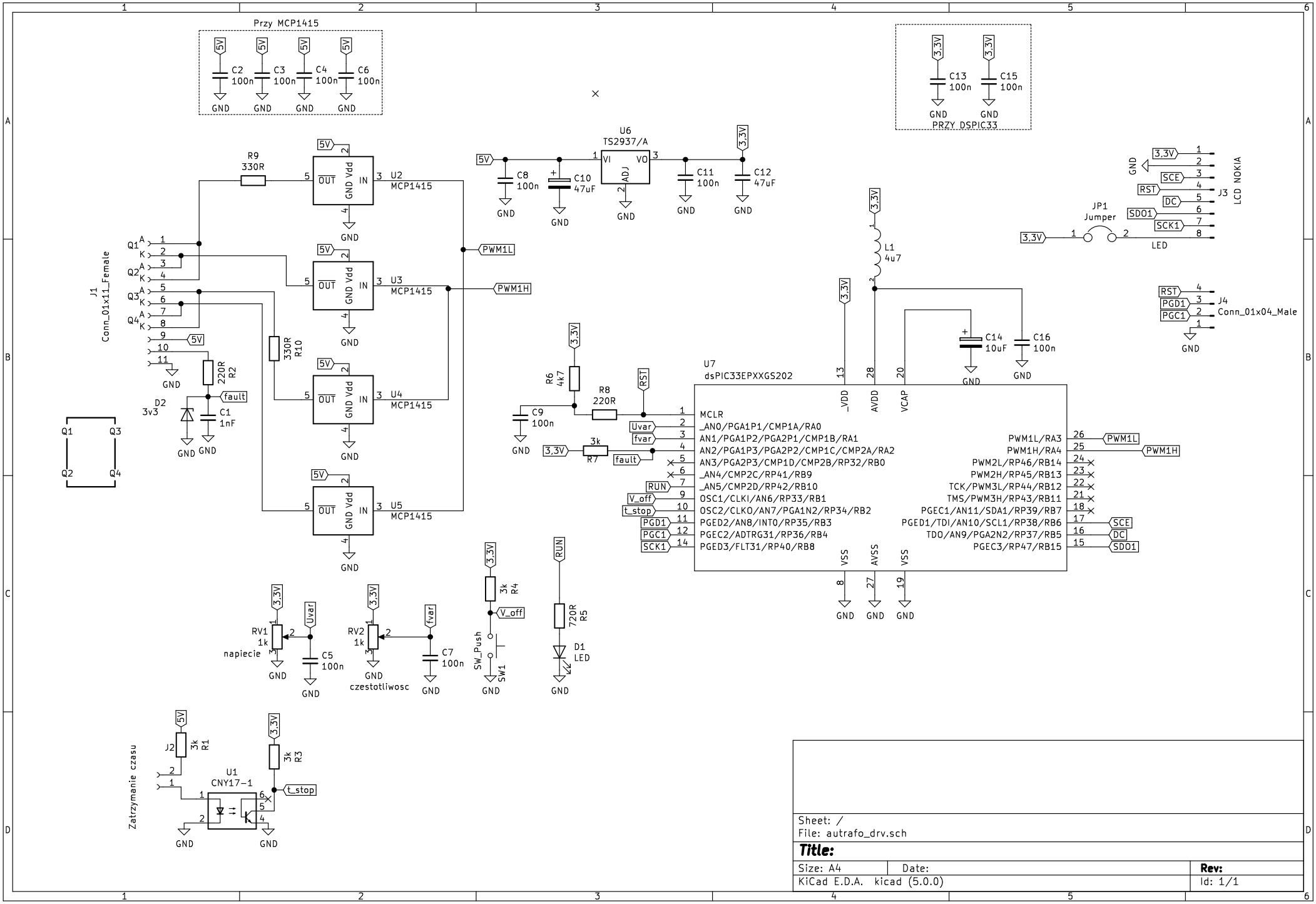
Przy MCP1415
C2 100n
C3 100n
C4 100n
C6 100n
C13 100n
C15 100n
PRZY DSPIC33
U6 TS2937/A
C8 100n
C10 47uF
C11 100n
C12 47uF
R9 330R
U2 MCP1415
U3 MCP1415
U4 MCP1415
U5 MCP1415
PWM1L
PWM1H
J1 Conn_01x11_Female
Q1
Q2
Q3
Q4
330R R10
220R R2
D2 3v3
C1 1nF
fault
L1 4u7
JP1 Jumper
LED
J3 LCD NOKIA
SCE
RST
DC
SDO1
SCK1
J4 Conn_01x04_Male
PGD1
PGC1
C14 10uF
C16 100n
U7 dsPIC33EPXXGS202
R6 4k7
R8 220R
C9 100n
R7 3k
Uvar
fvar
RUN
V_off
t_stop
MCLR
_AN0/PGA1P1/CMP1A/RA0
AN1/PGA1P2/PGA2P1/CMP1B/RA1
AN2/PGA1P3/PGA2P2/CMP1C/CMP2A/RA2
AN3/PGA2P3/CMP1D/CMP2B/RP32/RB0
_AN4/CMP2C/RP41/RB9
_AN5/CMP2D/RP42/RB10
OSC1/CLKI/AN6/RP33/RB1
OSC2/CLKO/AN7/PGA1N2/RP34/RB2
PGD2/AN8/INT0/RP35/RB3
PGEC2/ADTRG31/RP36/RB4
PGED3/FLT31/RP40/RB8
PWM1L/RA3
PWM1H/RA4
PWM2L/RP46/RB14
PWM2H/RP45/RB13
TCK/PWM3L/RP44/RB12
TMS/PWM3H/RP43/RB11
PGEC1/AN11/SDA1/RP39/RB7
PGED1/TDI/AN10/SCL1/RP38/RB6
TDO/AN9/PGA2N2/RP37/RB5
PGEC3/RP47/RB15
_VDD
AVDD
VCAP
VSS
AVSS
RV1 1k napiecie
C5 100n
RV2 1k czestotliwosc
C7 100n
3k R4
SW_Push
SW1
720R R5
D1 LED
Zatrzymanie czasu
J2
3k R1
U1 CNY17-1
3k R3
Sheet: /
File: autrafo_drv.sch
Title:
Size: A4
Date:
Rev:
KiCad E.D.A. kicad (5.0.0)
Id: 1/1